For Faster, more Efficient Project Delivery

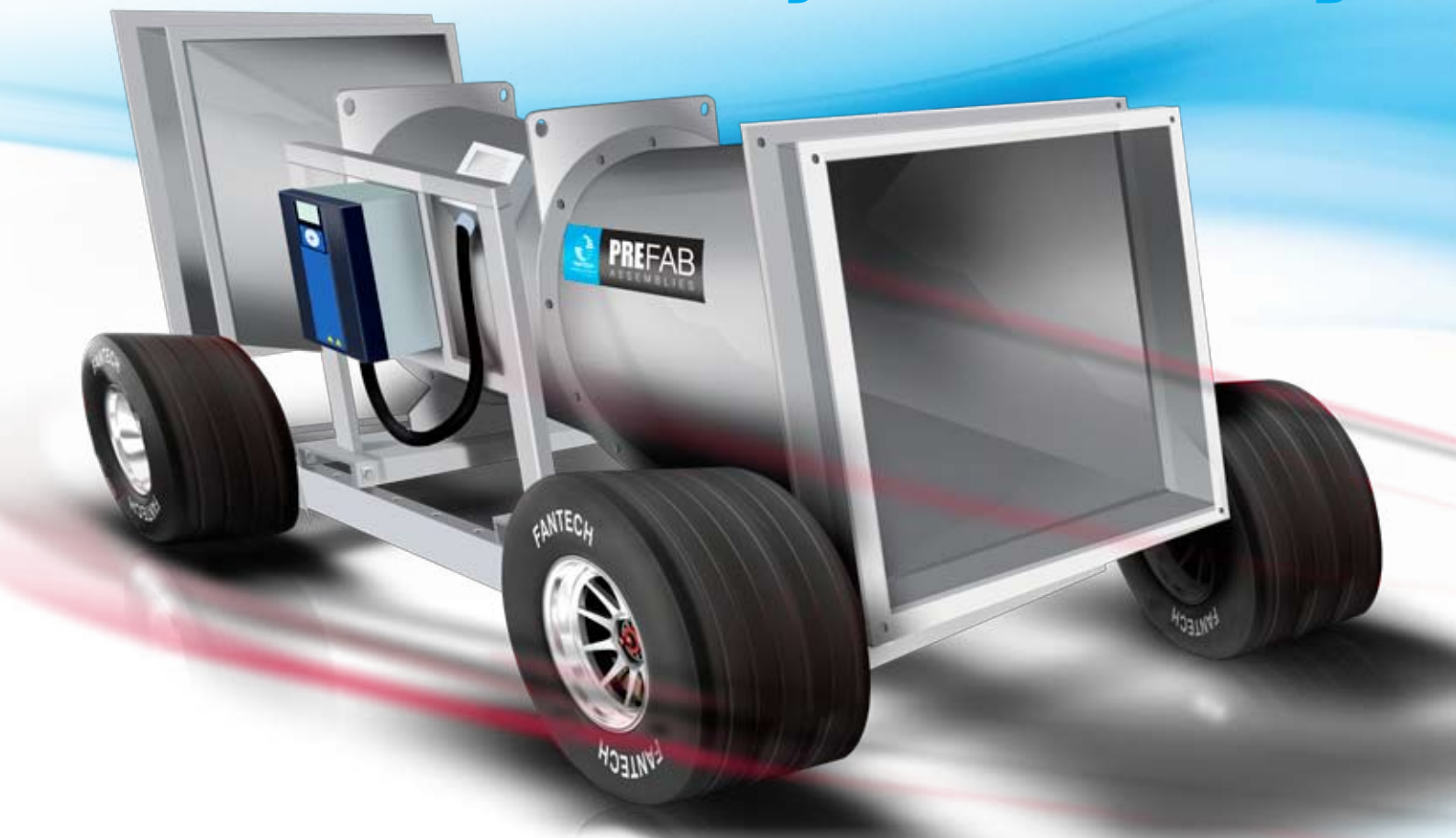

PREFAB
ASSEMBLIES

- Assemblies include axial fans from 560mm to 2 metres
- Suitable for both floor or hung installations
- Designed to optimise system performance
- Revit models available with clash detection

Fantech's structurally certified prefabricated assemblies combine its high quality range of axial fans with transitions, lifting lugs and flexible connectors. This modular system simplifies installation, improves on-site productivity and saves engineering, project drafting and labour costs.

FANTECH
Intelligent Ventilation

Improves on-site productivity

On-site installation of individual components requires storage and working space that often causes site congestion, OH&S issues and time wastage from needing to collect and assemble components. Installing a Fantech prefabricated modular assembly ensures a high quality product built on time, as the manufacturing process takes place within a controlled factory environment.
The assembly is then simply lifted and mounted into position which simplifies the installation, improves on-site productivity and helps control labour costs. It also means project delays caused by waiting for single components to be delivered to site will no longer be an issue.

The Fantech prefabricated assemblies include:

1. Adjustable pitch axial in-line fans ranging from 560mm to 2 metres diameter
2. Fan to duct transitions
3. Flexible connections
4. Structurally certified base frame
5. Structurally certified lifting lugs
6. Optional anti-vibration mounts
7. Optional Variable Speed Drive (VSD)

Reduces site traffic congestion

A Fantech prefabricated modular assembly can also reduce the number of product deliveries to site. This not only helps to minimise site traffic congestion but also reduces carbon emissions.

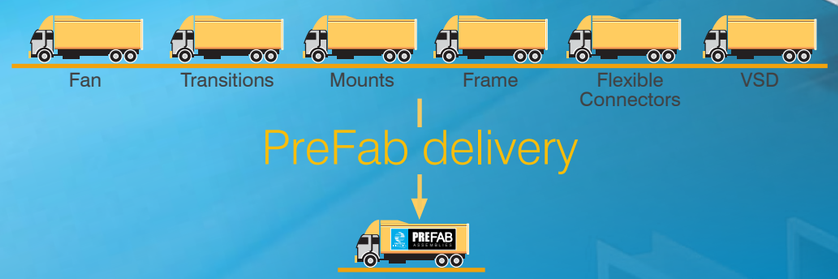

PreFab delivery

Built for optimal performance and durability

Each Fantech prefabricated assembly has been designed for optimal performance and to suit a range of installations. The square to round transitions are available as nude and with noise suppressing material in 50, 75 and 100mm thickness configurations, covered with foil or perforated steel. Their outer skin is manufactured from galvanised sheet to ensure a long lasting durable construction.

Flexible connectors are fitted at both the inlet and outlet of the fan and are available for standard and high temperature applications.

The assemblies incorporate four lifting points that help make moving the unit into position easier. Its clever design makes it suitable for both floor and hung mounted installations.

The structurally certified base frame is manufactured from high strength Parallel Flange Channel and is hot-dip galvanised for additional corrosion protection.



Hung mounted installation

Reduced engineering and drafting costs

Cost savings can be made in the design stages of the project due to the modular, certified designs needing no client engineering. Furthermore, three dimensional Revit models are available for all modular assembly sizes, significantly reducing project planning and drafting costs.

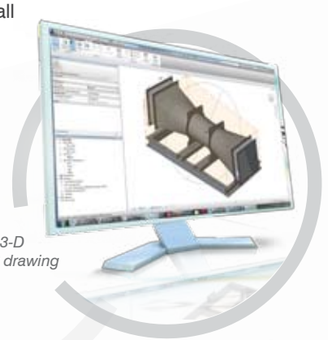

3-D Rivet drawing

Structurally certified to Australian Standards

The Fantech modular assemblies and lifting lugs have been structurally certified to ensure compliance with the following Australian Standards:

Modular assembly

Structurally certified to meet Australian Standards:

- AS3990-1993 Mechanical Equipment - Steelwork.
- AS1170.0:2002 - Structural Design Actions.
- AS1170.2:2002 - Structural Design Actions - Wind Actions.

Lifting lugs

Structurally certified to meet Australian Standards:

- AS3990-1993 Mechanical Equipment - Steelwork.
- AS4991:2004 - Lifting devices.

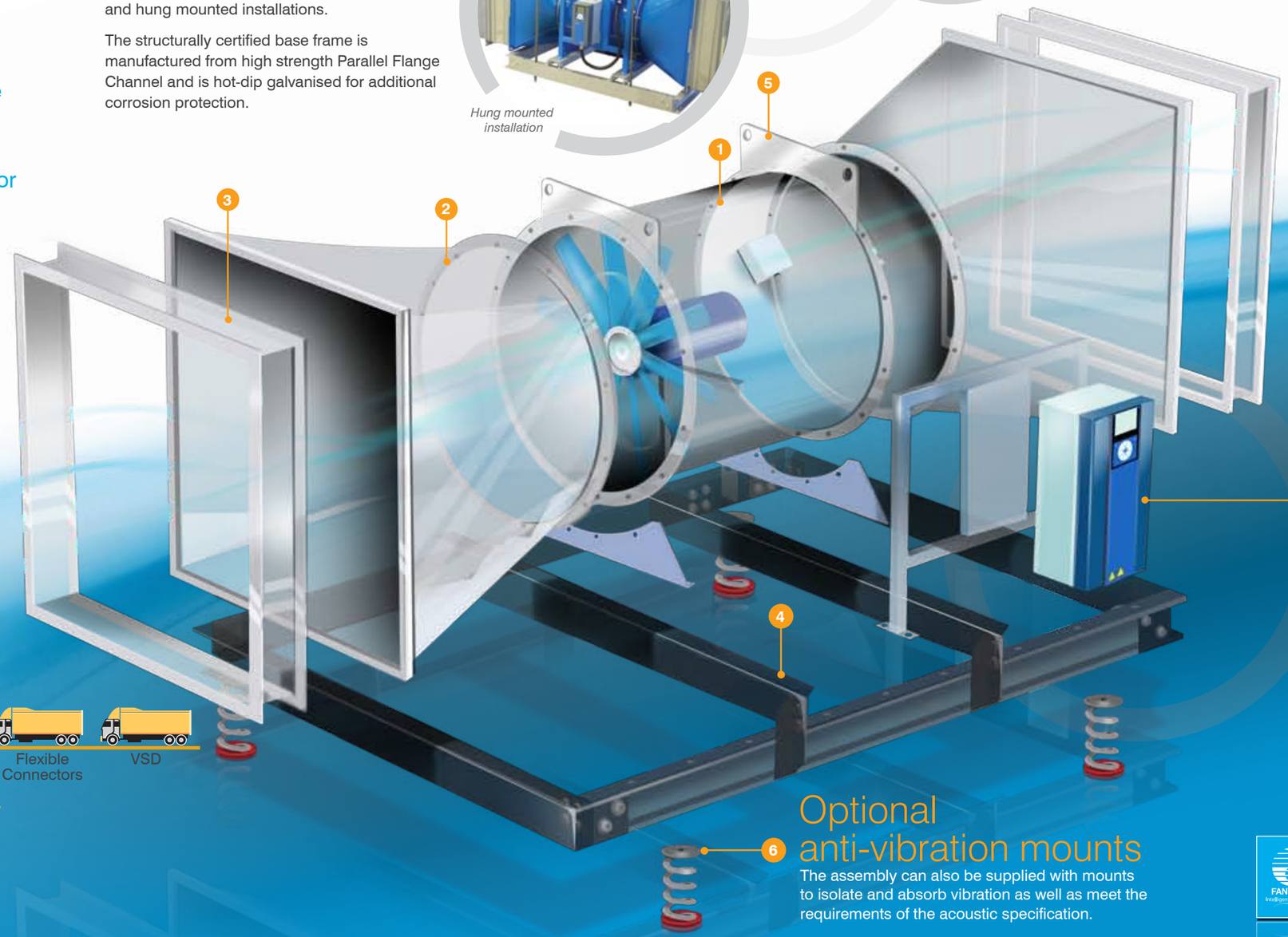

Optional VSD

7

As an option, a Variable Speed Drive can be purchased from Fantech which will be suitably mounted and pre-wired using EMC glands and screened cable. Alternatively a client's VSD can be free-issued to Fantech where it can be mounted and pre-wired to electrical regulations.

Optional anti-vibration mounts

6

The assembly can also be supplied with mounts to isolate and absorb vibration as well as meet the requirements of the acoustic specification.

FANTECH Intelligent Ventilation
PREFAB ASSEMBLIES

Suitable for a wide range of installation types

Fantech's structurally certified prefabricated assemblies include its high quality range of axial fans from 560mm to 2 metres diameter. They are combined with transitions, lifting lugs and flexible connectors to improve on-site productivity and save engineering, project drafting and labour costs.

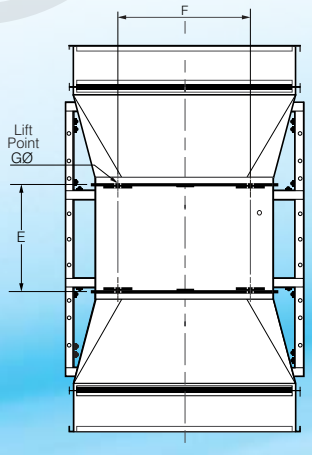

Product Code	AØ	B□	C	D	E	F	GØ	H	I	J	K
PAA056	560	700	800	930	300-600	399	30	770	930-1230	890	505
PAA063	630	800	900	980	300-800	446	30	870	1060-1560	985	550
PAA071	710	900	1000	1200	400-800	372	40	970	1260-1660	1135	650
PAA080	800	1000	1100	1200	400-800	421	40	1070	1300-1700	1235	700
PAA100	1000	1250	1350	1550	400-1000	538	40	1320	1530-2130	1490	830
PAA125	1250	1550	1650	1780	400-1000	838	50	1620	1750-2350	1840	1030
PAA140	1400	1750	1850	1980	400-1000	939	50	1820	1980-2580	1975	1063
PAA160	1600	2000	2100	2230	400-1000	936	50	2070	2200-2800	2235	1200
PAA180	1800	2250	2350	2450	400-1000	1023	60	2320	2430-3030	2510	1350
PAA200	2000	2500	2600	2900	400-1000	1140	60	2570	2660-3260	2735	1450

Dimensions in mm

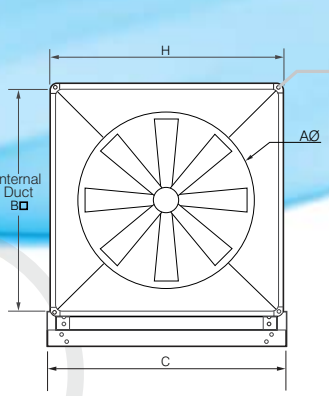

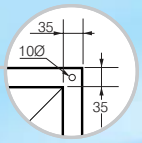

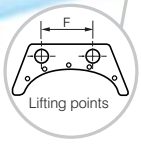

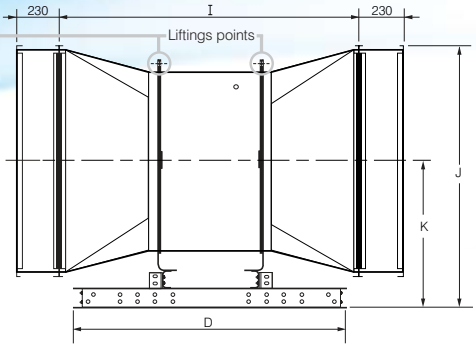



Transition dimensions and internal wall material

To suit a range of applications, the prefabricated assembly's square to round transitions are available as nude and with noise suppressing material in 50, 75 and 100mm thickness configurations, covered with foil or perforated steel.

Fan Diameter	560	630	710	800	1000	1250	1400	1600	1800	2000
Transition (Internal, from flange)	700 x 700	800 x 800	900 x 900	1000 x 1000	1250 x 1250	1550 x 1550	1750 x 1750	2000 x 2000	2250 x 2250	2500 x 2500
Noise Suppressing Material Lining	- Perforated Steel - Foil	- Perforated Steel - Foil	- Perforated Steel - Foil	- Perforated Steel	- Perforated Steel	- Perforated Steel	- Perforated Steel	- Perforated Steel	- Perforated Steel	- Perforated Steel

Dimensions in mm

Fitment of your transitions and VSD's

Transitions and flexible connections that have different heights and widths to those offered above can be free issued to Fantech and mounted to the required prefabricated assembly. Dimensional limitations on transitions, ie height above and below fan's centre, and transition width (see illustrations below and right), will be based on symmetry, total assembly weight and dimension restrictions on fan selection. VSD's free issued to Fantech can be fitted and wired to fan. Please contact Fantech for more detailed information regarding transition limitations and VSD fittment.

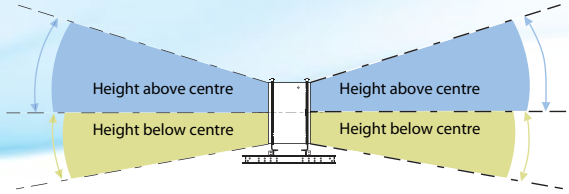

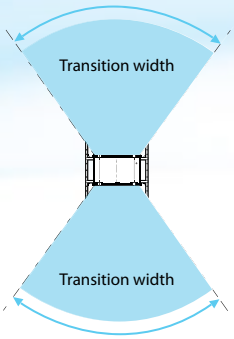

For further information visit www.fantech.com.au/prefab or scan the QR code.

FANTECH
Intelligent Ventilation

Fantech Pty. Ltd.

Victoria:	(+61 3) 9554 7845
New South Wales:	(02) 8811 0400
South Australia:	(08) 8294 0530
Northern Territory:	(08) 8947 0447
Queensland:	(07) 3299 9888
Western Australia:	(08) 9209 4999
A.C.T.	(02) 6280 5511
New Zealand:	(09) 444 6266

www.fantech.com.au

For sales enquiries contact:

Specifications and design subject to change without notice.